	STD BONNET			COP BONNET			BIO-PURE ACTUATED		
VALVE SIZE	"A1"	"B1"	"C1"	"A2"	"B2"	"C2"	"A3"	"B3"	"C3"
00.25 [DN8]	1.25 [31,8]	1.96 [49,8]	0.86 [21,8]	1.25 [31,8]	2.33 [59,2]	0.85 [21,6]	1.75 [44,5]	3.45 [87,6]	3.10 [78,7]
00.38 [DN10]	1.25 [31,8]	1.96 [49,8]	0.86 [21,8]	1.25 [31,8]	2.33 [59,2]	0.85 [21,6]	1.75 [44,5]	3.45 [87,6]	3.10 [78,7]
00.50 [DN15]	1.25 [31,8]	1.96 [49,8]	0.86 [21,8]	1.25 [31,8]	2.33 [59,2]	0.85 [21,6]	1.75 [44,5]	3.45 [87,6]	3.10 [78,7]

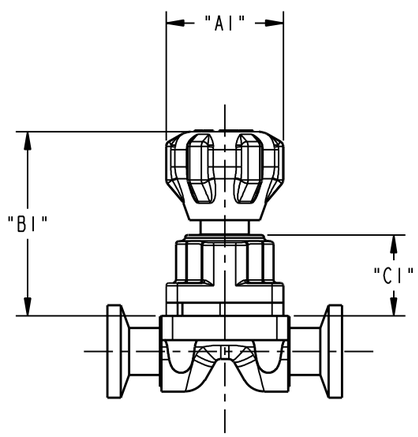

STANDARD BONNET

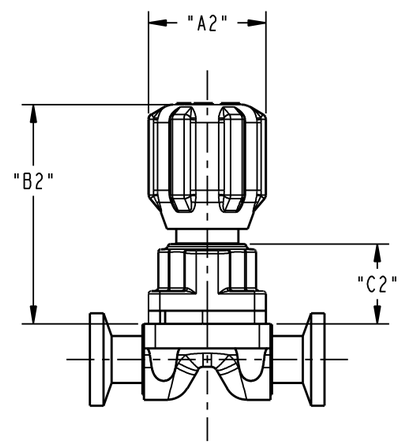

COP BONNET

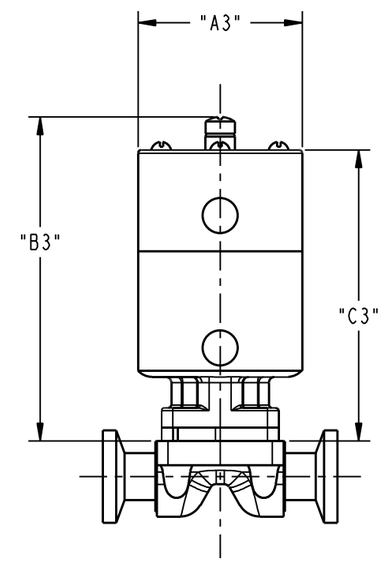

BIO-PURE ACTUATED

THIS DOCUMENT IS THE SOLE PROPERTY OF ITT CORPORATION, OR ITS SUBSIDIARY, AND IS PROVIDED SUBJECT TO RETURN. IT IS ISSUED IN STRICT CONFIDENCE AND SHALL NOT BE REPRODUCED, OR COPIED, OR DISCLOSED IN WHOLE OR IN PART, OR USED AS THE BASIS FOR THE MANUFACTURE OR SALES OF APPARATUS OR PARTS TO WHICH THE DOCUMENT RELATES, WITHOUT THE EXPRESS WRITTEN CONSENT OF ITT CORPORATION, OR ITS SUBSIDIARY. THIS LEGEND SHALL BE MARKED ON ANY REPRODUCTION HEREOF, IN WHOLE OR IN PART. ALL RIGHTS TO THE INFORMATION AND DESIGN DISCLOSED HEREIN ARE RESERVED TO ITT CORPORATION, OR ITS SUBSIDIARY.

PURE-FLO ORDER: - ITEM: -
CUSTOMER: -
CUSTOMER PO: -
OTHER INFO: -
-

THIRD ANGLE PROJECTION

UNLESS OTHERWISE SPECIFIED, ALL DIMENSIONS ARE IN

UNLESS OTHERWISE NOTED

INCH	MM
X : ± 0.06	X : ± 1,5
.X : ± 0.06	.X : ± 1,5
.XX : ± 0.06	.XX : ± ,5
.XXX : ± 0.02	
X/X : ± 1/16	
.X° : ± .5°	.X° : ± .5°
X° : ± 1°	X° : ± 1°

	DATE	BY
DWN	01/26/11	MJM
CHKD	01/26/11	JRD
APVD	01/26/11	JRD

BIO-PURE WEIR VALVE OUTLINE
00.25 - 00.50

MASTER DWG: A26714/- | ECN# 10203

ITT Pure-Flo www.ittpureflo.com

C | A26714 | SHEET 1 OF 1 | REV -

ISSUED BY: - | CERT BY:

CD_PF1_C 11/30/10